ESP4C

Electrical Sliding plug compact

Door mechanism

Lighter operator

- **Save 30 Kg per door system**
- **30% lighter** and **compact** than existing products on the market

High reliability

- Over **20 000** Belt driven system in service worldwide
- **Single actuator** for a double leaf's door and locking function

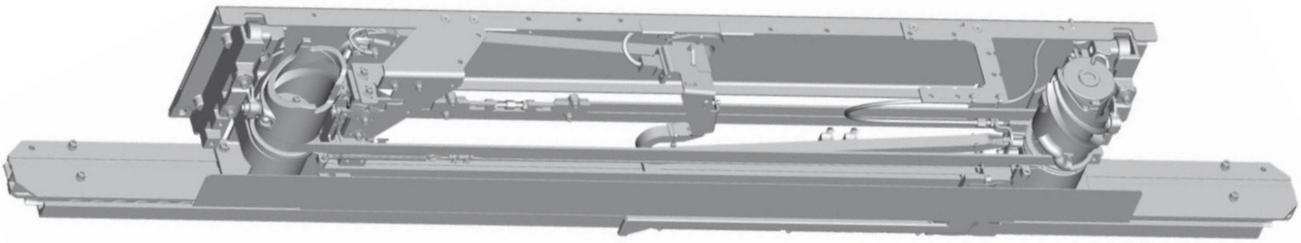

Standardization

- **73%** of standard parts between single & double doors
- The same door operator for LRV, Metro but also Regional and intercity train cars

Performances

- Door control unit designed for **cybersecurity** and **CBM**
- **- 5dB lower noise emission** during operation

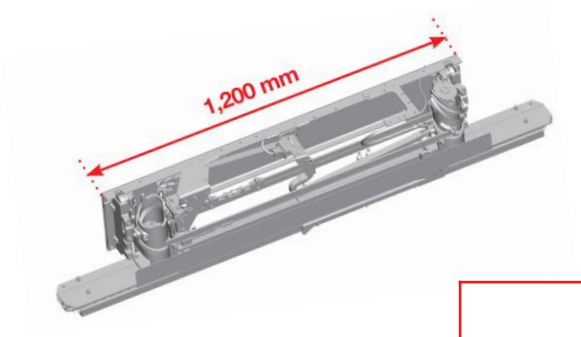

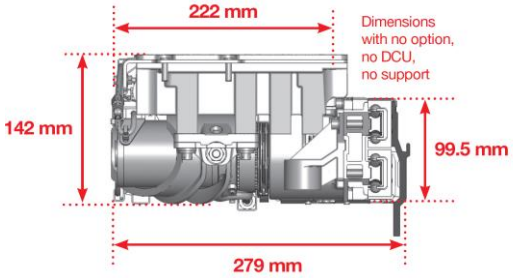

	Technical characteristics	
	Single leaf	**Double leaves**
Freeway	650 – 1400 mm	1200 – 2000 mm
Distance between pillars	Freeway + 230 mm	Freeway + 190mm
Plug movement	70 mm	
Vertical coordination	Either vertical bars or lower arms	
Mechanism weight and hanger device	46 kg for a 1,300 mm double door	
Resistance to pressure wave	Up to 2500 Pa	
Noise emission	The average noise < 75dB The maximum peak < 80dB	

contact:

Z.I Les Yvaudières – 75,avenue Yves Farge
BP 149 – 37701 Saint-Pierre-Des-Corps Cedex - France
Tel : +33 2 47 32 55 55
Email: raildoors@wabtec.com
www.Wabtec.com